MICRO LAMBDA WIRELESS, INC.

MLTO SERIES (TO-8 .27")
PERMANENT MAGNET YTO's

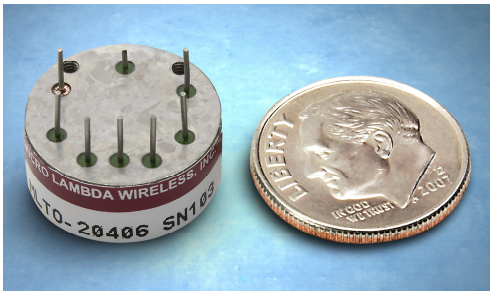

FEATURES

- 2-8 GHz Frequency Coverage
- FM/Phase-Lock Port
- TO-8 Package
- High Reliability

DESCRIPTION

The MICRO LAMBDA **MLTO**-Series Permanent Magnet YIG-Tuned Oscillators cover any 2 GHz bandwidth over the frequency range of 2-8 GHz. They are available in customer selected tuning ranges and are fitted with a low power main coil, and FM coil for phase locking. All units operate from a +8 Volt and –5 Volt supply and operate over the 0º to + 65ºC temperature range. Units do not require a heater.

ELECTRICAL AND PERFORMANCE SPECIFICATIONS

Guaranteed Specifications at 0º to +65º C Case Temperature

Model No.	**MLTO-20204**	**MLTO-20406**	**MLTO-20608**
Frequency Range, Min.	2-4 GHz	4-6 GHz	6-8 GHz
Free Run Frequency	3 GHz	5 GHz	7 GHz
Free Run Frequency Settability	+/- 200 MHz	+/- 200 MHz	+/- 200 MHz
Power Output, Min.	+10 dBm	+10 dBm	+9 dBm
Power Output Variation, Max.	3 dB	3 dB	3 dB
Freq. Drift over Temp., Max.	+/-10 MHz	+/-10 MHz	+/-10 MHz
Pulling Figure (12 dB RL), Typ.	2 MHz	2 MHz	2 MHz
Pushing Figure +8 Vdc, Typ.	2 MHz/V	2 MHz/V	2 MHz/V
Harmonics, Min.	-15 dBc	-15 dBc	-15 dBc
Spurious Output, Min.	-70 dBc	-70 dBc	-70 dBc
Phase Noise @ 10kHz Offset Typ.	-100 dBc/Hz	-100 dBc/Hz	-100 dBc/Hz
@ 100kHz Offset Min.	-125 dBc/Hz	-125 dBc/Hz	-125 dBc/Hz
@ 100kHz Offset Typ.	-128 dBc/Hz	-128 dBc/Hz	-128 dBc/Hz
Main Coil			
Sensitivity, Typ.	6 MHz/mA	6 MHz/mA	6 MHz/mA
Linearity, Typ.	+/-4 MHz	+/-4 MHz	+/-4 MHz
Hysteresis, Typ.	3 MHz	3 MHz	3 MHz
Impedance @ 1 kHz, Typ.	11 Ohm/10 mH	11 Ohm/10 mH	11 Ohm/10 mH
FM Coil			
Sensitivity, Typ.	300 kHz/ma	300 kHz/ma	300 kHz/ma
3 dB Bandwidth, Typ.	1 MHz	1 MHz	1 MHz
Deviation @ 400 kHz, Min.	+/- 50 MHz	+/- 50 MHz	+/- 50 MHz
Impedance @ 1 MHz, Typ.	.7 Ohm/1 uH	.7 Ohm/1 uH	.7 Ohm/2 uH
DC Power, Max. +8.0 Vdc +/- 0.5 V	60 mA	60 mA	60 mA
-5.0 Vdc +/- 0.25 v	15 mA	15 mA	15 mA
Case Style	91-005	91-005	91-005

Micro Lambda Wireless, Inc. - 46515 Landing Parkway, Fremont California 94538 * Phone (510) 770-9221 * Fax (510) 770-9213

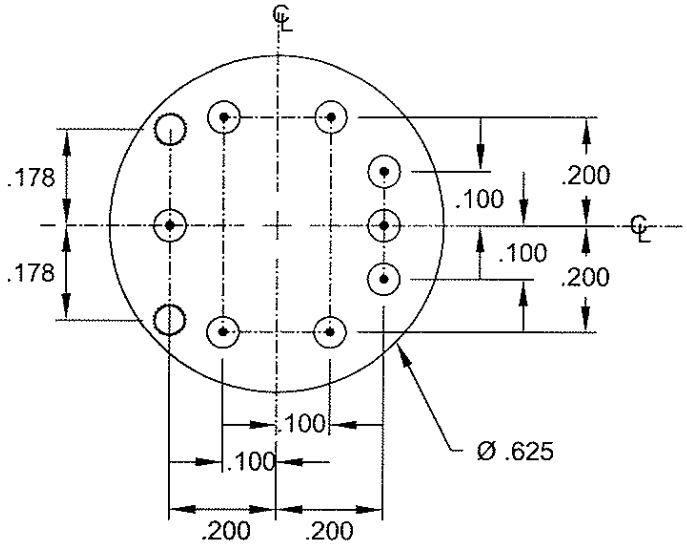

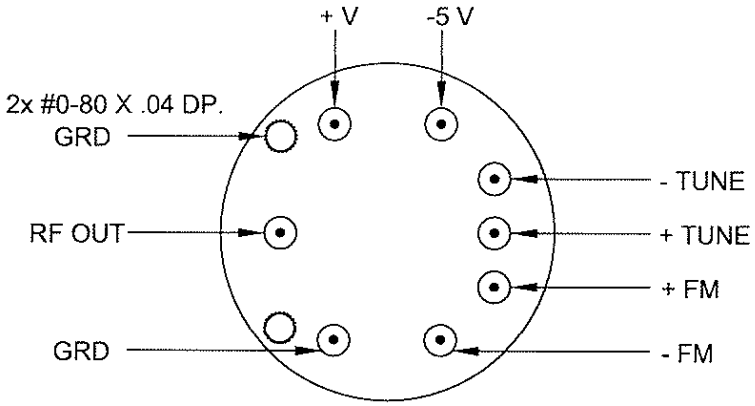

PIN OUT

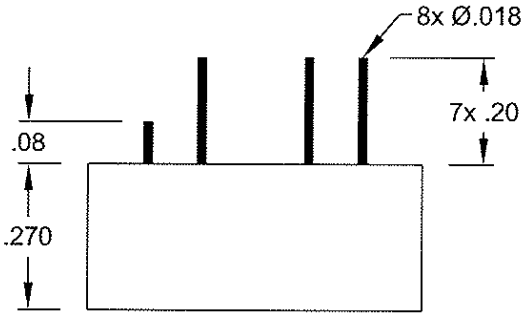

WEIGHT: .36 Oz (10g)

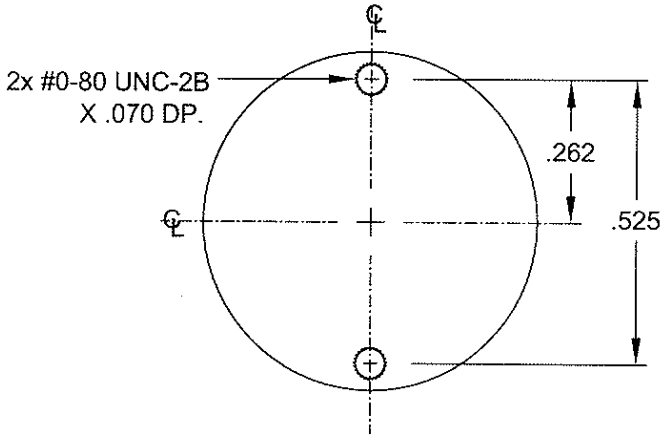

REV	DESCRIPTION	DATE	APPROVED

UNLESS OTHERWISE SPECCIFIED DIMENSIONS ARE IN INCHES TOLERANCE ARE :

FRACTIONS	DECIMALS	ANGLES
±	.xx ±.010	
±	.xxx ±.005	

MATERIAL

FINISH

DO NOT SCALE DRAWING

CONTRACT NO.

APPROVALS		DATE
DRAWN	N.NGUYEN	11/18/09
CHECKED		11/18/09
ISSUED		

MICRO LAMBDA WIRELESS, INC.

PC MOUNT OSCILLATOR

(ø .625" X .270" HIGH)

SIZE	CAGE No.	DWG. NO.	REV.
	0RN63	91 - 005	

SCALE SHEET