MICRO LAMBDA WIRELESS, INC.

MLTM SERIES (TO-8 .27")
MINIATURE YTO's

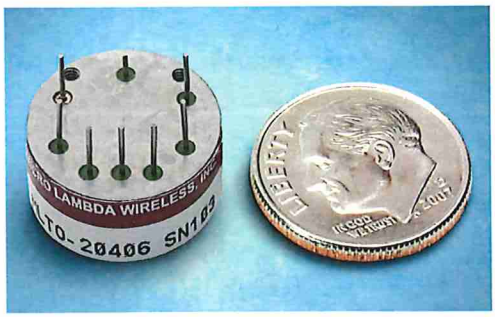

FEATURES

- 2-4 GHz Frequency Coverage
- FM/Phase-Lock Port
- TO-8 Package
- High Reliability

DESCRIPTION

The MICRO LAMBDA **MLTM**-Series Miniature YIG-Tuned Oscillators cover the frequency range of 2-4 GHz. They are fitted with a low power main coil, and FM coil for phase locking. All units operate from a +8 Volt and –5 Volt supply and operate over the 0º to + 65ºC temperature range. Units do not require a heater.

ELECTRICAL AND PERFORMANCE SPECIFICATIONS

Guaranteed Specifications at 0º to +65º C Case Temperature

Model No.	**MLTM-20204**
Frequency Range, Min.	2-4 GHz
Power Output, Min.	+10 dBm
Power Output Variation, Max.	3 dB
Freq. Drift over Temp., Max.	+/-10 MHz
Pulling Figure (12 dB RL), Typ.	2 MHz
Pushing Figure +8 Vdc, Typ.	2 MHz/V
Harmonics, Min.	-15 dBc
Spurious Output, Min.	-70 dBc
Phase Noise @ 10kHz Offset Typ	-100 dBc/Hz
@ 100kHz Offset Min.	-125 dBc/Hz
@ 100kHz Offset Typ.	-128 dBc/Hz
Main Coil	
Sensitivity, Typ.	11 MHz/mA
Linearity, Typ.	+/-2 MHz
Hysteresis, Typ.	1 MHz
Impedance @ 1 kHz, Typ.	11 Ohm/3 mH
FM Coil	
Sensitivity, Typ.	300 kHz/ma
3 dB Bandwidth, Typ.	2 MHz
Deviation @ 400 kHz, Min.	+/- 50 MHz
Impedance @ 1 MHz, Typ.	.7 Ohm/1 uH
DC Power, Max. +8.0 Vdc +/- 0.5 V	60 mA
-5.0 Vdc +/- 0.25 v	15 mA
Case Style	99-0091-023

Micro Lambda Wireless, Inc. - 46515 Landing Parkway, Fremont California 94538 * Phone (510) 770-9221 * Fax (510) 770-9213

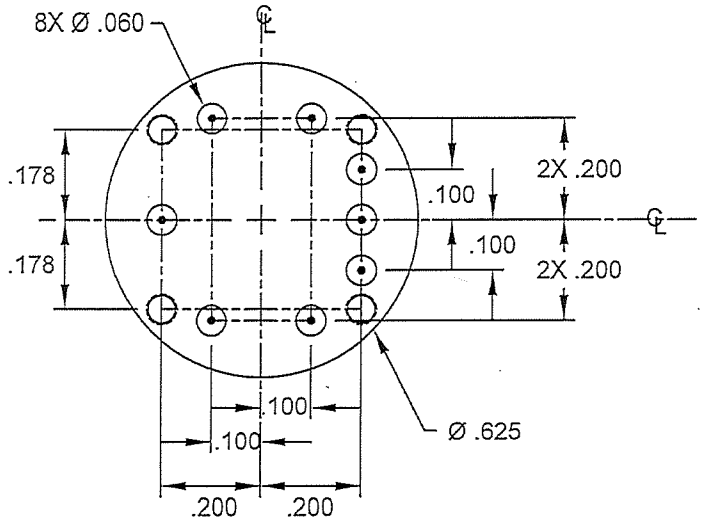

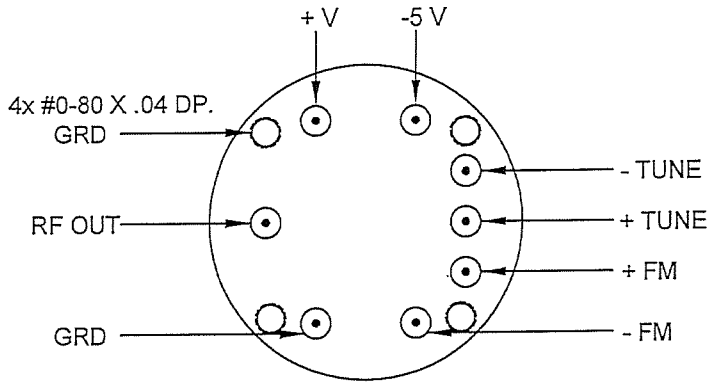

PIN OUT

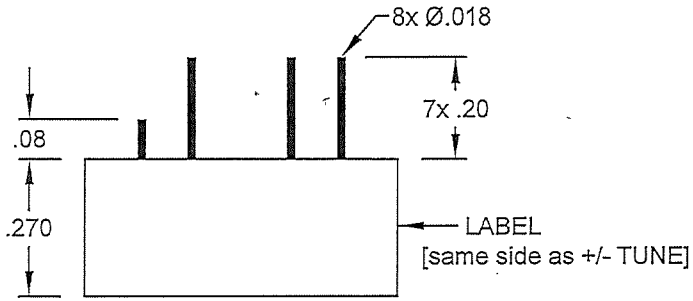

WEIGHT: .36 Oz (10g)

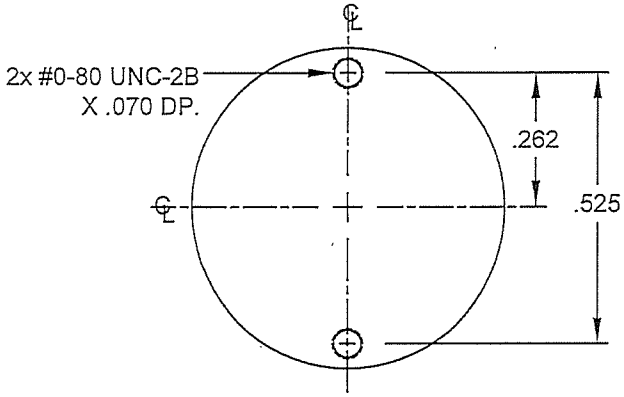

REV	DESCRIPTION	DATE	APPROVED

UNLESS OTHERWISE SPECCIFIED DIMENSIONS ARE IN INCHES TOLERANCE ARE:

FRACTIONS	DECIMALS	ANGLES
±	.xx ±.010	
±	.xxx ±.005	

MATERIAL

FINISH

DO NOT SCALE DRAWING

CONTRACT NO.

APPROVALS		DATE
DRAWN	N.NGUYEN	12/15/22
CHECKED	John Nguyen	12-15-22
ISSUED		

MICRO LAMBDA WIRELESS, INC.

PC MOUNT OSCILLATOR

(ø .625" X .270" HIGH W/ 4 MTG. SCREWS)

SIZE	CAGE No.	DWG. NO.	REV.
	0RN63	99-0091-023	E

SCALE | SHEET