MICRO LAMBDA WIRELESS, INC.

YIG TUNED FILTERS WITH MILITARY DIGITAL DRIVERS MD SERIES

FEATURES

- 500 MHz to 50 GHz
- Compensation for Temperature Drift
- Input Regulators for Improved Stability
  - Versus Power Supply Variations
- 12 Bit Tuning Resolution
- -40º C to +85º C Temperature Range

DESCRIPTION

MICRO LAMBDA YIG Filters, model types MLFP Series, MLFR-Series, MLFRD-Series and MLUN-Series are available with integrated digital driver circuits.

MICRO LAMBDA drivers eliminate the need for customers to design or develop their own driver circuits and sophisticated test and alignment procedures. Integrating a driver at MICRO LAMBDA's factory ensures that peak performance will be achieved at the time of manufacture. Alignment and compensation with the particular YIG filter can be maximized down to the component level.

All drivers in this series provide input voltage regulators, and compensation circuits to improve frequency drift.

YIG drivers act as Digital Word-to-Current converter, Converting standard DC input voltages into mA of current to tune a magnetic tuning coil.

POSITIVE INPUT DRIVERS
MD Series

MICRO LAMBDA positive digital drivers are available for military environments. Standard products provide for 12 bit TTL tuning input and operate over -40° to +85°C temperature range. Units incorporate a Mil-grade 25 pin control connector and filter feedthroughs in the driver housing to minimize EMI leakage.

The MD series of digital drivers provide the main coil current from the +15 volt input line. Current increases linearly from 0 mA = 0 GHz at a rate of approximately 50 mA per 1 GHz. A 2-8 GHz filter will require 100 mA @ 2 GHz and 400 mA @ 8 GHz.

Negative input drives which provide the main coil current on the –15 volt input line, are available as an option.

Frequency drift-performance can be minimized with inclusion temperature compensation circuits within the driver. This yields filter/driver combinations set at the factory with excellent frequency accuracy performance.

In special cases, speed-up circuits like those used to improve tuning speed of YIG-oscillators can be included to provide both fast-tuned and with good accuracy. Filter parameters can be maximized during factory alignment to meet customer specific requirements.

AVAILABLE OPTIONS FOR MD SERIES MILITARY DIGITAL DRIVERS

- **Customer Defined "Truth" Table**
- **Latched TTL**
- **Negative Input Drivers**

STANDARD POSITIVE INPUT DIGITAL DRIVER SELECTION GUIDE: MD SERIES

YIG TUNED FILTERS WITH MILITARY DIGITAL DRIVERS

DRIVER INPUT & RESPONSE	SPECIFICATION (-40 to + 85 deg. C)
Tuning Command	Start Word (all 0's) = Lowest Frequency Stop Word (all 1's) = Highest Frequency
Tuning Resolution	12 BIT Positive Logic (Fmax-Fmin)/4095 Bit Resolution All Data Bits have Internal 10k ohm Pull-up Resistor to +5V
Frequency Accuracy (Note 1) (excluding hysteresis)	See Table
Tuning Speed	2 mS for 1 GHz step to within +/-10 MHz.
Main Driver Inputs	
Supply Voltage & Current	+15 V +/- .5 V @ Filter Tuning Current + 50 mA, Max. -15 V +/- .5 V @ 50 mA, Max.
Supply Voltage Pushing	+/- .5 Vdc , 0.1 MHz Max.
Supply Voltage Ripple	10 mV Ripple Pk-Pk from 2 kHz to 3 MHz
Ground	Chassis Ground
YIG Heater Voltage & Current	+24 Vdc ±4 Vdc @ 300 - 750 mA surge for 2 seconds, 100 - 150 mA steady state, depending on filter type. Polarity independent : ±12 Vdc or ±15 Vdc acceptable
Latch Enable	LATCHEN_N is a TTL, 5V CMOS control line. It has an internal 10k-ohm pull-up resistor to +5 V. It is used to transfer the data on the bus to the digital driver circuit. TTL high = data ignored. Connect to Ground if enable is not required. If the unit is to be used on a computer data bus, the below timing Diagram applies. (All times = Minimum) 10 nS rise/fall latch transitions.

Note 1: Accuracy Includes Temp. Drift & Linearity

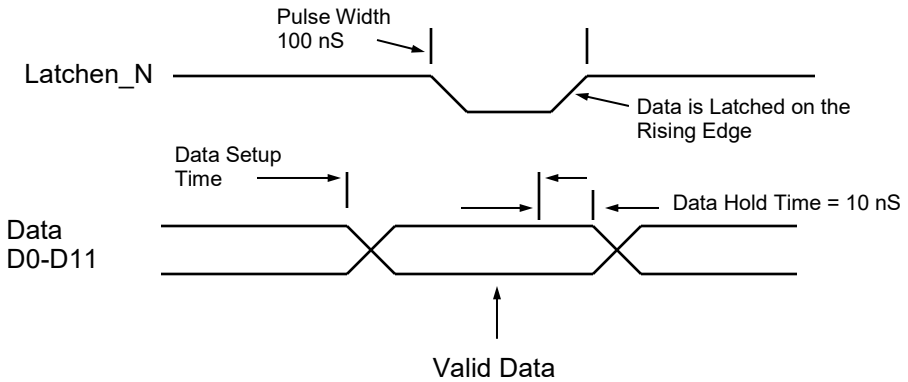

TIMING DIAGRAM

Bandpass Filters with Positive Input Digital Drivers (-40º C to +85º C)

Model Number	# Stages	Frequency GHz	3 dB Bandwidth (MHz)	Accuracy (MHz) *	Current +15V (mA)	Current -15V (mA)	Outline Drawing
MLFP-20520MD	2	0.5 to 2.0	20	+/- 20	350	50	21-052
MLFP-22018MD	2	2.0 to 18.0	25	+/- 32	1050	50	21-052
MLFP-22026MD	2	2.0 to 26.5	20	+/- 50	1200	50	21-061
MLFP-40520MD	4	0.5 to 2.0	20	+/- 20	350	50	21-052
MLFP-42008MD	4	2.0 to 8.0	20	+/- 28	550	50	21-052
MLFP-42018MD	4	2.0 to 18.0	40	+/- 32	1050	50	21-052
MLFP-42026MD	4	2.0 to 26.5	25	+/- 50	1200	50	21-052
MLFP-43040MD	4	3.0 to 40.0	30	+/- 65	1450	50	21-090
MLFP-43044MD	4	3.0 to 44.0	30	+/- 75	1550	50	21-090
MLFP-43050MD	4	3.0 to 50.0	30	+/- 105	2100	50	21-139
MLFP-46018MD	4	6.0 to 18.0	100	+/- 30	1050	50	21-052
MLFP-47040MD	4	7.0 to 40.0	35	+/- 65	1450	50	21-090
MLFP-48018MD	4	8.0 to 18.0	400	+/- 50	1050	50	21-052
MLFP-41840MD	4	18.0 to 40.0	50	+/- 65	1450	50	21-090
MLFP-62018MD	6	2.0 to 18.0	40	+/- 32	1050	50	21-045
MLFP-62026MD	6	2.0 to 26.5	30	+/- 50	1350	50	21-048
MLFP-66018MD	6	6.0 to 18.0	100	+/- 30	1050	50	21-045
MLFP-68018MD	6	8.0 to 18.0	500	+/- 50	1050	50	21-045
MLFP-70520MD	7	0.5 to 2.0	20	+/- 20	350	50	21-045
MLFP-72018MD	7	2.0 to 18.0	40	+/- 50	1050	50	21-045
MLFP-72026MD	7	2.0 to 26.5	30	+/- 65	1350	50	21-048
MLFP-76018MD	7	6.0 to 18.0	500	+/- 60	1050	50	21-045
MLFP-76018LMD	7-L	6.0 to 18.0	500	+/- 60	1050	50	21-045
MLFP-78018LMD	7-L	8.0 to 18.0	500	+/- 60	1050	50	21-045
MLFP-78020MD	7	8.0 to 20.0	500	+/- 60	1150	50	21-045
MLFP-78020LMD	7-L	8.0 to 20.0	500	+/- 60	1150	50	21-045

* Accuracy includes frequency drift and linearity errors over the temperature range.

Band Reject Filters with Positive Input Digital Drivers (-40º C to +85º C)

Model Number	Frequency GHz	3 dB Bandwidth (MHz)	40 dB Bandwidth	Accuracy (MHz) *	Current +15 V (mA)	Current -15 V (mA)	Outline Drawing
MLFR-0102MD	1.0 to 2.0	100	10	+/- 7	250	50	21-036
MLFR-0204MD	2.0 to 4.0	125	15	+/- 12	350	50	21-036
MLFR-0408MD	4.0 to 8.0	150	20	+/- 15	550	50	21-036
MLFR-0812MD	8.0 to 12.4	150	25	+/- 17	750	50	21-036
MLFR-1218MD	12.4 to 18.0	150	25	+/- 23	1050	50	21-036
MLFR-0502MD	0.5 to 2.0	150	5 @ 30dB	+/- 8	250	50	21-036
MLFR-0206MD	2.0 to 6.0	150	20	+/- 16	450	50	21-036
MLFR-0208MD	2.0 to 8.0	150	15	+/- 18	550	50	21-036
MLFR-0212MD	2.0 to 12.0	150	10	+/- 20	750	50	21-036
MLFR-0218MD	2.0 to 18.0	150	10	+/- 30	1050	50	21-036
MLFR-0220MD	2.0 to 20.0	150	5	+/- 30	1050	50	21-036
MLFR-0418MD	4.0 to 18.0	150	10	+/- 27	1050	50	21-036
MLFR-160418MD	4.0 to 18.0	150	25	+/- 27	1050	50	21-036
MLFR-0618MD	6.0 to 18.0	150	25	+/- 27	1050	50	21-036
MLFR-160618MD	6.0 to 18.0	150	25	+/- 27	1050	50	21-036
MLFR-0818MD	8.0 to 18.0	150	35	+/- 27	1050	50	21-036
MLFR-160808MD	8.0 to 18.0	150	35	+/- 27	1050	50	21-036

Dual Channel Band Reject Filters with Positive Input Digital Drivers (-40º C to +85º C)

MLFRD-0206MD	2.0 to 6.0	120	5	+/- 16	450	50	21-086
MLFRD-0208MD	2.0 to 8.0	120	5	+/- 18	550	50	21-086
MLFRD-0618MD	6.0 to 18.0	100	15	+/- 27	1050	50	21-086
MLFRD-0818MD	8.0 to 18.0	100	15	+/- 27	1050	50	21-086

Ultra Notch Band Reject Filters with Positive Input Digital Drivers (-40º C to +85º C)

Model Number	Frequency GHz	3 dB Bandwidth (MHz)	60 dB Bandwidth	Accuracy (MHz) *	Current +15 V (mA)	Current -15 V (mA)	Outline Drawing
MLUN-0305MD	.35 to .52	50	4 @ 30dB	+/- 8	100	50	**
MLUN-0502MD	.50 to 2.0	80	5 @ 40dB	+/- 10	250	50	**
MLUN-0206MD	2.0 to 6.0	120	17	+/- 16	450	50	**
MLUN-0618MD	6.0 to 18.0	175	35	+/- 27	1050	50	**
MLUN-0218MD	2.0 to 18.0	175	5	+/- 30	1050	50	**

* Accuracy includes frequency drift and linearity errors over the temperature range.

Outline Drawing: 21-045

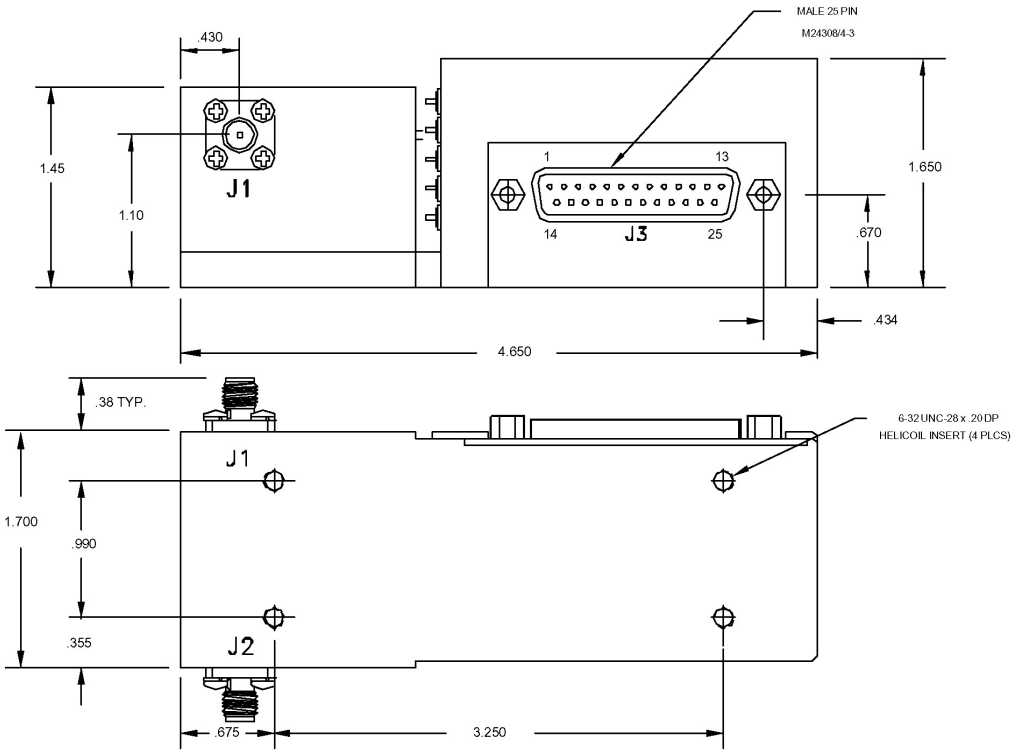

Weight: 23 oz.

CONNECTIONS			
CONN.	TYPE	PIN #	FUNCTION
J1	SMA FEMALE	THD	RF IN
J2	SMA FEMALE	THD	RF OUT
J3	DB25 MALE	1	DATA BIT 0 (LSB)
J3	DB25 MALE	2	DATA BIT 1
J3	DB25 MALE	3	DATA BIT 2
J3	DB25 MALE	4	DATA BIT 3
J3	DB25 MALE	5	DATA BIT 4
J3	DB25 MALE	6	DATA BIT 5
J3	DB25 MALE	7	DATA BIT 6
J3	DB25 MALE	8	DATA BIT 7
J3	DB25 MALE	9	DATA BIT 8
J3	DB25 MALE	10	DATA BIT 9
J3	DB25 MALE	11	DATA BIT 10
J3	DB25 MALE	12	DATA BIT 11 (MSB)
J3	DB25 MALE	13	N/C
J3	DB25 MALE	14	N/C
J3	DB25 MALE	15	N/C
J3	DB25 MALE	16	N/C
J3	DB25 MALE	17	LATCH/STROBE
J3	DB25 MALE	18	GROUND
J3	DB25 MALE	19	+SUPPLY VOLTAGE
J3	DB25 MALE	20	-SUPPLY VOLTAGE
J3	DB25 MALE	21	HEATER VOLTAGE
J3	DB25 MALE	22	HEATER RETURN
J3	DB25 MALE	23	FM COIL + **
J3	DB25 MALE	24	FM COIL - **
J3	DB25 MALE	25	TTL BAND SELECT *

* REQUIRED FOR DUAL OSC. ONLY
** NOT USED FOR FILTER

Outline Drawing: 21-036

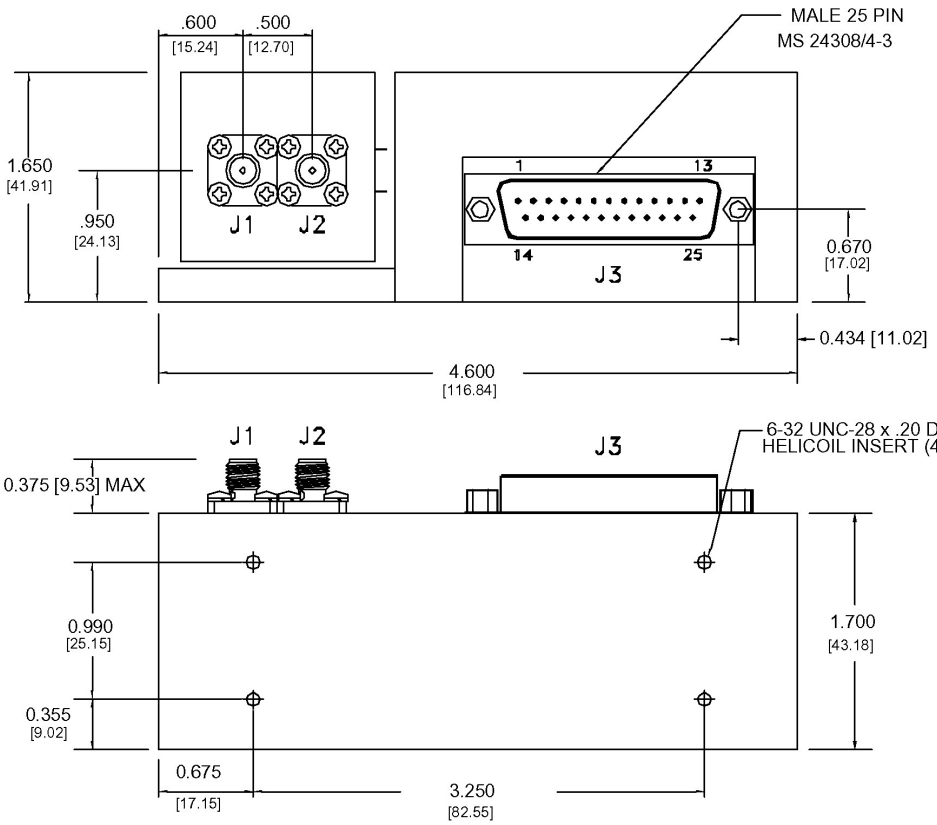

NOTES :

1. - DIMENSIONS ARE IN INCHES
2. - SUPPLY & GROUND WIRES = 20-22 GAUGE
   ALL OTHER WIRES = 24-26 GAUGE
3. - THERMAL COMPOUND REQUIRED BETWEEN
   BASE PLATE AND MOUNTING SURFACE
4. - DIMENSIONS IN ( ) ARE IN MM
4. - LATCH/STROBE TTL 0 = DATA ACTIVE
   TTL 1 = DATA LATCHED

(*) : TTL BAND SEL. 0=8-Fmax ; 1=2-8 GHz
* 000=2GHz ; 5FF=8GHz ; FFF=Fmax

Weight: 17 oz.

Micro Lambda Wireless, Inc. - 46515 Landing Parkway, Fremont California 94538 * Phone (510) 770-9221 * Fax (510) 770-9213

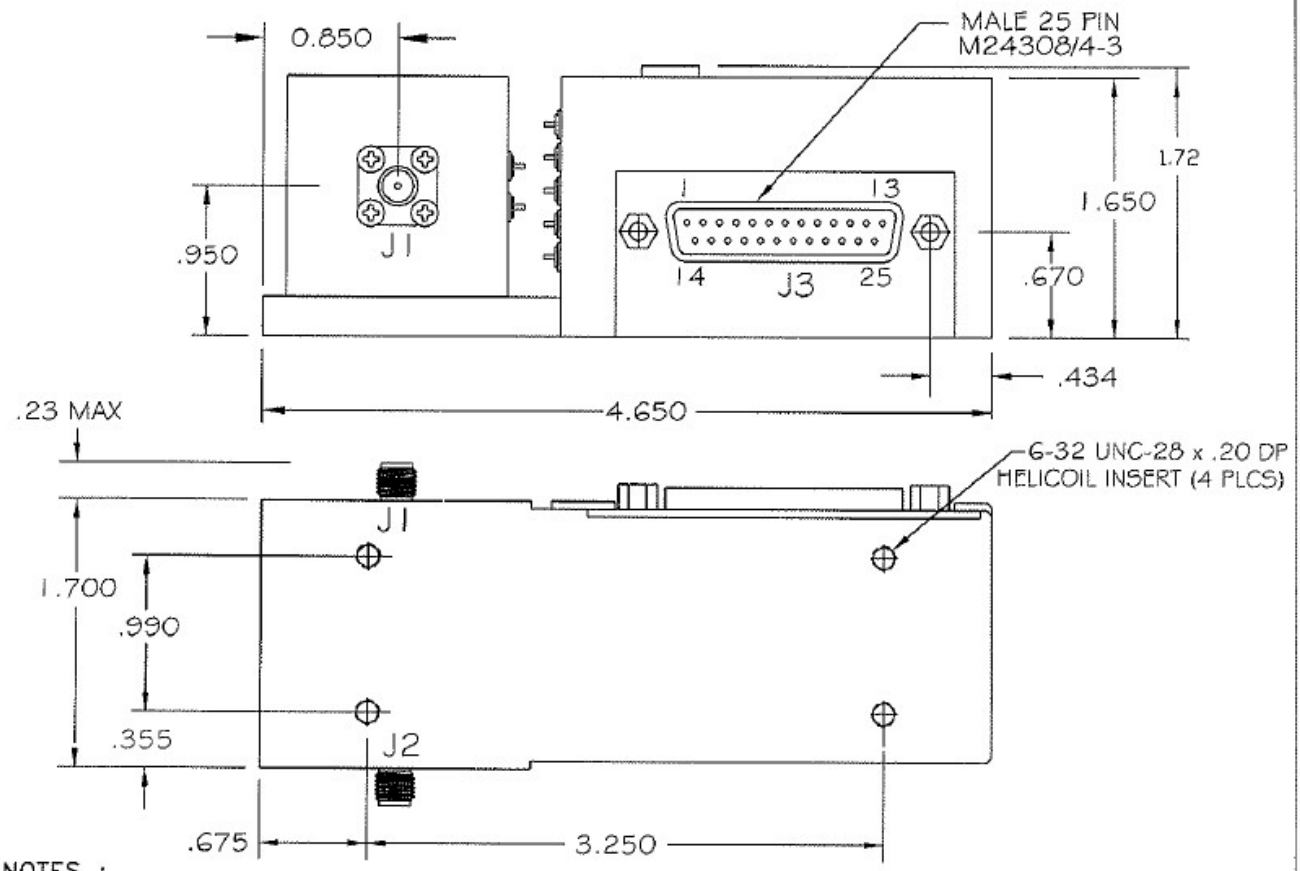

NOTES :

1. - DIMENSIONS ARE IN INCHES
2. - SUPPLY & GROUND WIRES = 20-22 GAUGE
   ALL OTHER WIRES = 24-26 GAUGE
3. - THERMAL COMPOUND REQUIRED BETWEEN
   BASE PLATE AND MOUNTING SURFACE
4. - DIMENSIONS IN ( ) ARE IN MM
4. - LATCH/STROBE TTL 0 = DATA ACTIVE
   TTL 1 = DATA LATCHED

(*) : TTL BAND SEL. 0=8-Fmax ; 1=2-8 GHz
* 000=2GHz ; 5FF=8GHz ; FFF=Fmax

CONNECTIONS			
CONN.	TYPE	PIN #	FUNCTION
J1	SMA FEMALE	THD	RF IN
J2	SMA FEMALE	THD	RF OUT
J3	DB25 MALE	1	DATA BIT 0 (LSB)
J3	DB25 MALE	2	DATA BIT 1
J3	DB25 MALE	3	DATA BIT 2
J3	DB25 MALE	4	DATA BIT 3
J3	DB25 MALE	5	DATA BIT 4
J3	DB25 MALE	6	DATA BIT 5
J3	DB25 MALE	7	DATA BIT 6
J3	DB25 MALE	8	DATA BIT 7
J3	DB25 MALE	9	DATA BIT 8
J3	DB25 MALE	10	DATA BIT 9
J3	DB25 MALE	11	DATA BIT 10
J3	DB25 MALE	12	DATA BIT 11 (MSB)

CONNECTIONS			
CONN.	TYPE	PIN #	FUNCTION
J3	DB25 MALE	13	N/C
J3	DB25 MALE	14	N/C
J3	DB25 MALE	15	N/C
J3	DB25 MALE	16	N/C
J3	DB25 MALE	17	LATCH/STROBE
J3	DB25 MALE	18	GROUND
J3	DB25 MALE	19	+SUPPLY VOLTAGE
J3	DB25 MALE	20	-SUPPLY VOLTAGE
J3	DB25 MALE	21	HEATER VOLTAGE
J3	DB25 MALE	22	HEATER RETURN
J3	DB25 MALE	23	FM COIL + **
J3	DB25 MALE	24	FM COIL - **
J3	DB25 MALE	25	TTL BAND SELECT *

* REQUIRED FOR DUAL OSC. ONLY
** NOT USED FOR FILTER

UNLESS OTHERWISE SPECIFIED DIMENSIONS ARE IN INCHES
TOLERANCE ARE
FRACTIONS DECIMALS ANGLES
± .x ±.030
± .xx ±.010

WEIGHT 20 oz.

FINISH

DO NOT SCALE DRAWING

CONTRACT NO.

APPROVALS		DATE
DRAWN	N.NGUYEN	6/11/09
CHECK	[signature]	6/11/09
MANUF		
Q.A.		

MICRO LAMBDA WIRELESS, INC.

BPF (1.4"X1.4") WITH MILITARY 12 BIT DIGITAL DRIVER

SIZE	CAGE No	DWG. NO.	REV
	ORN63	21 - 052	A

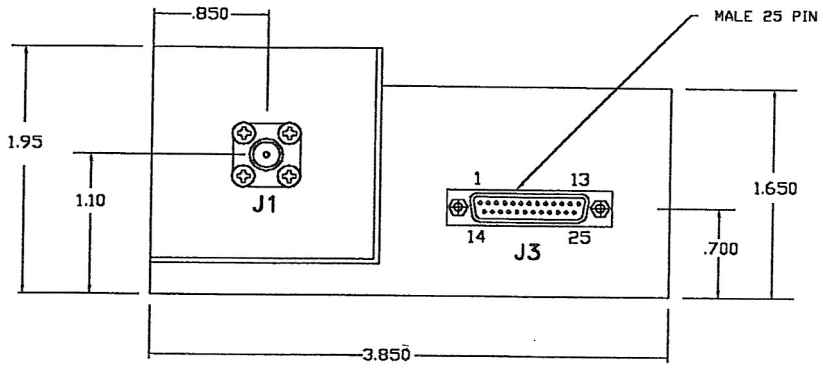

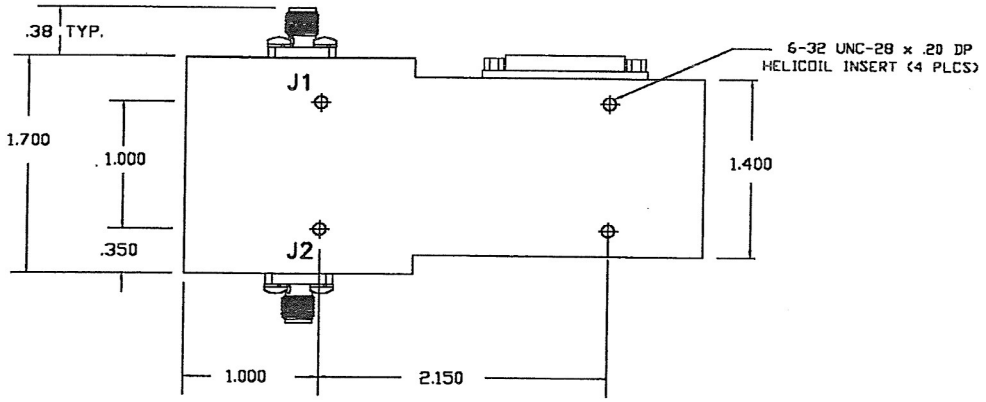

NOTES :

1. – DIMENSIONS ARE IN INCHES
2. – SUPPLY & GROUND WIRES = 20–22 GAUGE
   ALL OTHER WIRES = 24–26 GAUGE
3. – THERMAL COMPOUND REQUIRED BETWEEN
   BASE PLATE AND MOUNTING SURFACE
4. – LATCH/STROBE TTL 0 = DATA ACTIVE
   TTL 1 = DATA LATCHED

(*) : TTL BAND SEL. 0=8–Fmax ; 1=2–8 GHz
* 000=2GHz ; 5FF=8GHz ; FFF=Fmax

CONNECTIONS			
CONN.	TYPE	PIN #	FUNCTION
J1	SMA FEMALE	THD	RF IN
J2	SMA FEMALE	THD	RF OUT
J3	DB25 MALE	1	DATA BIT 0 (LSB)
J3	DB25 MALE	2	DATA BIT 1
J3	DB25 MALE	3	DATA BIT 2
J3	DB25 MALE	4	DATA BIT 3
J3	DB25 MALE	5	DATA BIT 4
J3	DB25 MALE	6	DATA BIT 5
J3	DB25 MALE	7	DATA BIT 6
J3	DB25 MALE	8	DATA BIT 7
J3	DB25 MALE	9	DATA BIT 8
J3	DB25 MALE	10	DATA BIT 9
J3	DB25 MALE	11	DATA BIT 10
J3	DB25 MALE	12	DATA BIT 11 (MSB)

CONNECTIONS			
CONN.	TYPE	PIN #	FUNCTION
J3	DB25 MALE	13	N/C
J3	DB25 MALE	14	N/C
J3	DB25 MALE	15	N/C
J3	DB25 MALE	16	N/C
J3	DB25 MALE	17	LATCH/STROBE
J3	DB25 MALE	18	GROUND
J3	DB25 MALE	19	+SUPPLY VOLTAGE
J3	DB25 MALE	20	−SUPPLY VOLTAGE
J3	DB25 MALE	21	HEATER VOLTAGE
J3	DB25 MALE	22	HEATER RETURN
J3	DB25 MALE	23	FM COIL + **
J3	DB25 MALE	24	FM COIL − **
J3	DB25 MALE	25	TTL BAND SELECT *

* REQUIRED FOR DUAL OSC. ONLY
** NOT USED FOR FILTER

UNLESS OTHERWISE SPECIFIED DIMENSIONS ARE IN INCHES
TOLERANCE ARE :
FRACTIONS DECIMALS ANGLES
± .XX ±.020
± .XXX ±.005

WEIGHT: 19 oz.

FINISH

DO NOT SCALE DRAWING

CONTRACT NO.

APPROVALS	DATE
DRAWN N.NGUYEN	5/31/01
ENGR. DS	5/31/01
MANUF.	
Q.A.	

MICRO LAMBDA, INC.

BANDPASS FILTER (1.7"; 4 STC.) WITH DICITAL DRIVER

SIZE	CAGE No	DWG. NO.	REV.
	0RN63	21 – 061	

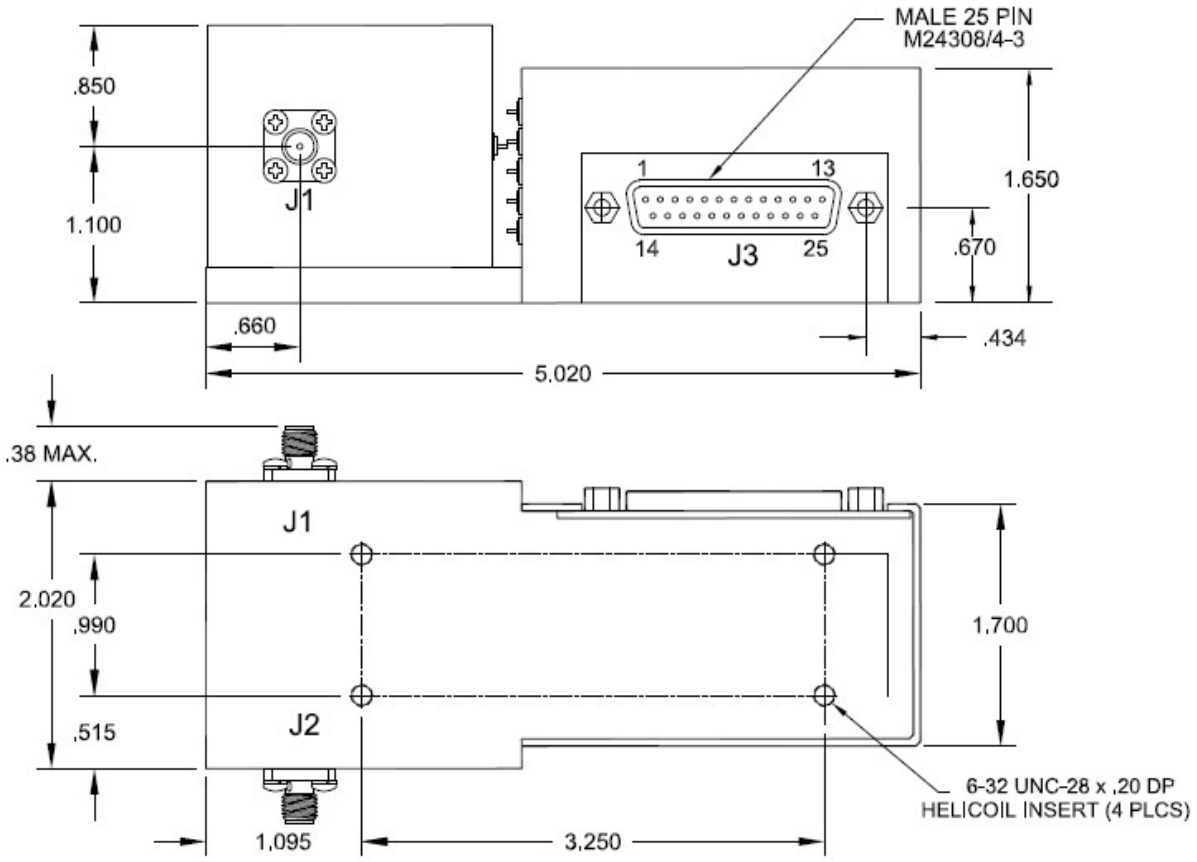

NOTES :

1, - DIMENSIONS ARE IN INCHES

2. - SUPPLY & GROUND WIRES = 20-22 GAUGE
ALL OTHER WIRES = 24-26 GAUGE

3. - THERMAL COMPOUND REQUIRED BETWEEN
BASE PLATE AND MOUNTING SURFACE

4, - DIMENSIONS IN ( ) ARE IN MM

4, - LATCH/STROBE TTL 0 = DATA ACTIVE
TTL 1 = DATA LATCHED

(*) : TTL BAND SEL. 0=8-Fmax ; 1=2-8 GHz
* 000=2GHz ; 5FF=8GHz ; FFF=Fmax

CONNECTIONS			
CONN.	TYPE	PIN #	FUNCTION
J1	K-CONN (FEM)	THD	RF IN
J2	K-CONN (FEM)	THD	RF OUT
J3	DB25 MALE	1	DATA BIT 0 (LSB)
J3	DB25 MALE	2	DATA BIT 1
J3	DB25 MALE	3	DATA BIT 2
J3	DB25 MALE	4	DATA BIT 3
J3	DB25 MALE	5	DATA BIT 4
J3	DB25 MALE	6	DATA BIT 5
J3	DB25 MALE	7	DATA BIT 6
J3	DB25 MALE	8	DATA BIT 7
J3	DB25 MALE	9	DATA BIT 8
J3	DB25 MALE	10	DATA BIT 9
J3	DB25 MALE	11	DATA BIT 10
J3	DB25 MALE	12	DATA BIT 11 (MSB)

CONNECTIONS			
CONN.	TYPE	PIN #	FUNCTION
J3	DB25 MALE	13	N/C
J3	DB25 MALE	14	N/C
J3	DB25 MALE	15	N/C
J3	DB25 MALE	16	N/C
J3	DB25 MALE	17	LATCH/STROBE
J3	DB25 MALE	18	GROUND
J3	DB25 MALE	19	+SUPPLY VOLTAGE
J3	DB25 MALE	20	-SUPPLY VOLTAGE
J3	DB25 MALE	21	HEATER VOLTAGE
J3	DB25 MALE	22	HEATER RETURN
J3	DB25 MALE	23	FM COIL + **
J3	DB25 MALE	24	FM COIL - **
J3	DB25 MALE	25	TTL BAND SELECT *

* REQUIRED FOR DUAL OSC, ONLY
** NOT USED FOR FILTER

UNLESS OTHERWISE SPECIFIED DIMENSIONS ARE IN INCHES
TOLERANCE ARE:
FRACTIONS ± DECIMALS .xx ±.020 .xxx ±.005 ANGLES ±
WEIGHT 20 oz.
FINISH
DO NOT SCALE DRAWING

CONTRACT NO.

APPROVALS	DATE
DRAWN N.NGUYEN	4/20/10
ENGR.	
MANUF.	
QA.	

MICRO LAMBDA WIRELESS, INC.

BPF (2.0"X1.7") WITH MILITARY 12 BIT DIGITAL DRIVER

SIZE	CAGE No	DWG. NO.	REV.
	0RN63	21 - 090	A

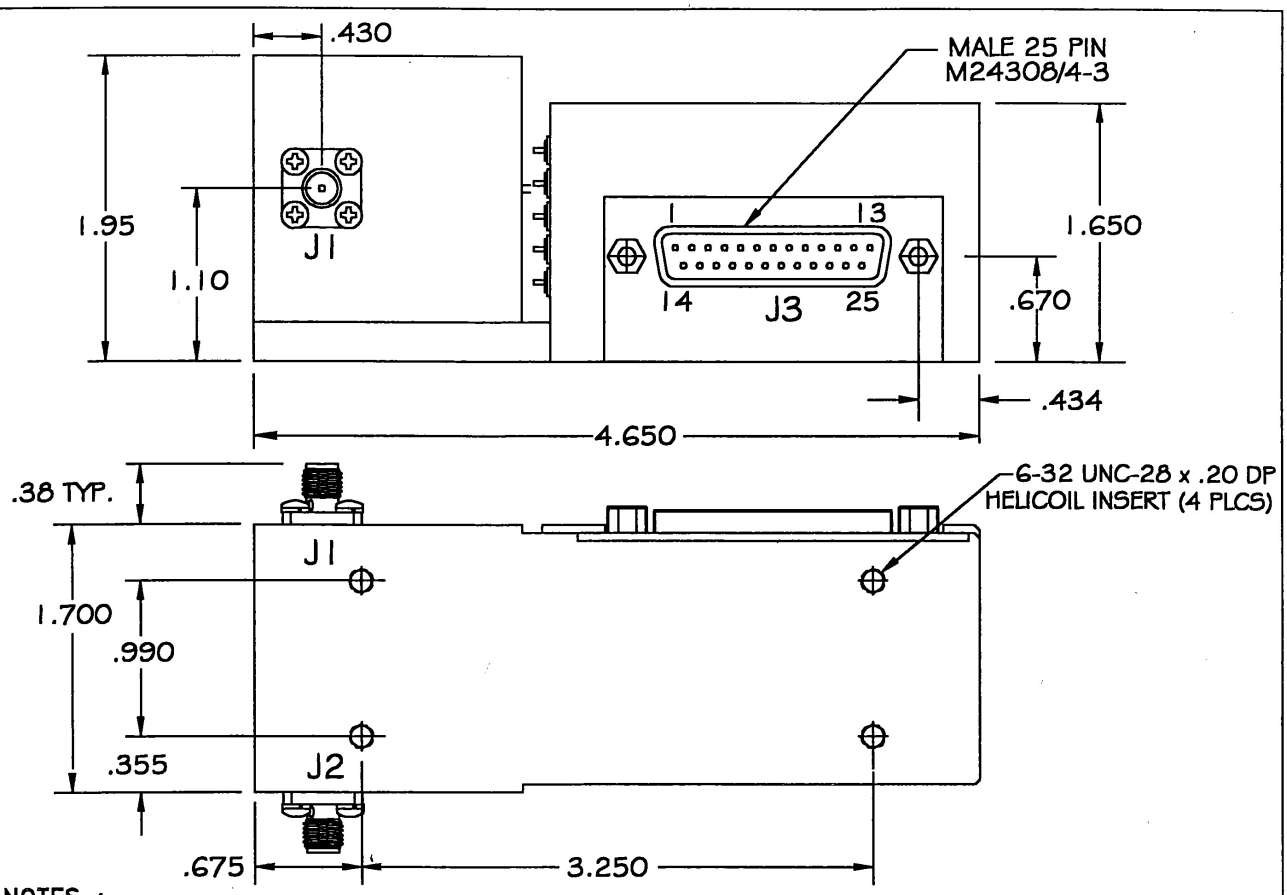

NOTES :

1. - DIMENSIONS ARE IN INCHES
2. - SUPPLY & GROUND WIRES = 20-22 GAUGE
   ALL OTHER WIRES = 24-26 GAUGE
3. - THERMAL COMPOUND REQUIRED BETWEEN
   BASE PLATE AND MOUNTING SURFACE
4. - DIMENSIONS IN ( ) ARE IN MM
4. - LATCH/STROBE TTL 0 = DATA ACTIVE
   TTL 1 = DATA LATCHED

(*) : TTL BAND SEL. 0=8-Fmax ; 1=2-8 GHz
* 000=2GHz ; 5FF=8GHz ; FFF=Fmax

CONNECTIONS			
CONN.	TYPE	PIN #	FUNCTION
J1	SMA FEMALE	THD	RF IN
J2	SMA FEMALE	THD	RF OUT
J3	DB25 MALE	1	DATA BIT 0 (LSB)
J3	DB25 MALE	2	DATA BIT 1
J3	DB25 MALE	3	DATA BIT 2
J3	DB25 MALE	4	DATA BIT 3
J3	DB25 MALE	5	DATA BIT 4
J3	DB25 MALE	6	DATA BIT 5
J3	DB25 MALE	7	DATA BIT 6
J3	DB25 MALE	8	DATA BIT 7
J3	DB25 MALE	9	DATA BIT 8
J3	DB25 MALE	10	DATA BIT 9
J3	DB25 MALE	11	DATA BIT 10
J3	DB25 MALE	12	DATA BIT 11 (MSB)

CONNECTIONS			
CONN.	TYPE	PIN #	FUNCTION
J3	DB25 MALE	13	N/C
J3	DB25 MALE	14	N/C
J3	DB25 MALE	15	N/C
J3	DB25 MALE	16	N/C
J3	DB25 MALE	17	LATCH/STROBE
J3	DB25 MALE	18	GROUND
J3	DB25 MALE	19	+SUPPLY VOLTAGE
J3	DB25 MALE	20	-SUPPLY VOLTAGE
J3	DB25 MALE	21	HEATER VOLTAGE
J3	DB25 MALE	22	HEATER RETURN
J3	DB25 MALE	23	FM COIL + **
J3	DB25 MALE	24	FM COIL - **
J3	DB25 MALE	25	TTL BAND SELECT *

* REQUIRED FOR DUAL OSC. ONLY
** NOT USED FOR FILTER

UNLESS OTHERWISE SPECIFIED DIMENSIONS ARE IN INCHES
TOLERANCE ARE :
FRACTIONS ± DECIMALS .XX ±.020 .XXX ±.005 ANGLES ±
WEIGHT 25 oz.
FINISH
DO NOT SCALE DRAWING

CONTRACT NO.

APPROVALS	DATE
DRAWN N.NGUYEN	10/19/98
ENGR	10/19/98
MANUF	
Q.A.	

MICRO LAMBDA, INC.

BPF (1.7"X1.7") WITH MILITARY 12 BIT DIGITAL DRIVER

SIZE	CAGE No	DWG. NO.	REV.
	ORN63	21 - 048	

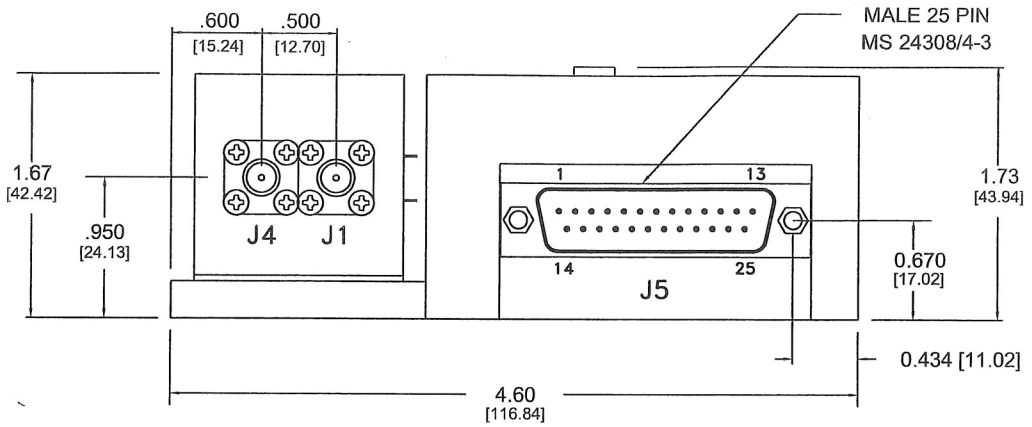

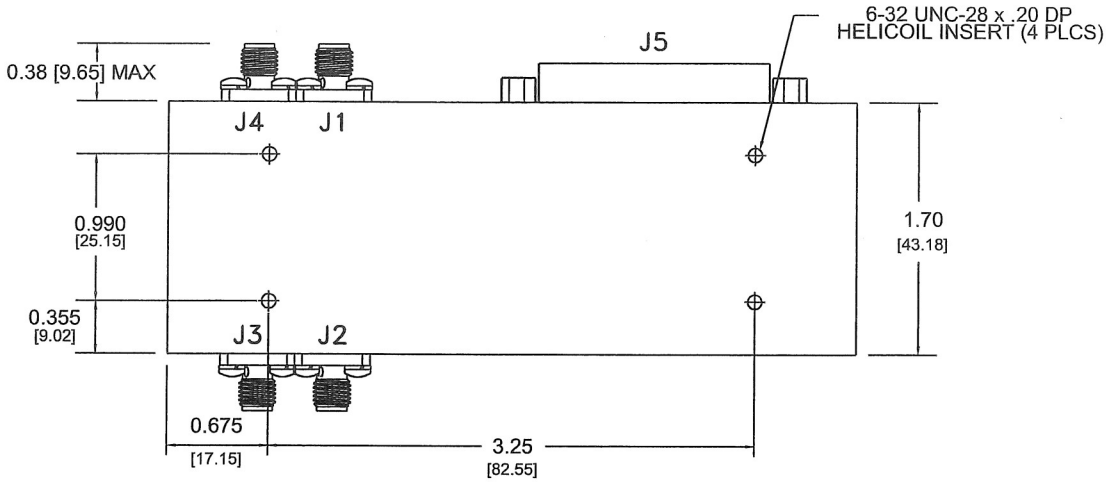

* POWER SUPPLY & GROUND WIRES=20-22 AWG * OTHERS=24-26 AWG

DATA 000= F-MIN LATCH-EN 0 = DATA ACTIVE * DIMENSIONS ARE IN INCHES

FFF= F-MAX 1 = DATA LATCHED * DIMENSIONS IN [ ] ARE IN MM.

CONNECTIONS			
CONN.	TYPE	PIN #	FUNCTION
J1	SMA FEMALE	THD	RF IN
J2	SMA FEMALE	THD	RF OUT
J3	SMA FEMALE	THD	RF IN
J4	SMA FEMALE	THD	RF OUT
J5	DB25 MALE	1	DATA BIT 0 (LSB)
J5	DB25 MALE	2	DATA BIT 1
J5	DB25 MALE	3	DATA BIT 2
J5	DB25 MALE	4	DATA BIT 3
J5	DB25 MALE	5	DATA BIT 4
J5	DB25 MALE	6	DATA BIT 5
J5	DB25 MALE	7	DATA BIT 6
J5	DB25 MALE	8	DATA BIT 7
J5	DB25 MALE	9	DATA BIT 8
J5	DB25 MALE	10	DATA BIT 9
J5	DB25 MALE	11	DATA BIT 10

CONNECTIONS			
CONN.	TYPE	PIN #	FUNCTION
J5	DB25 MALE	12	DATABIT 11 (MSB)
J5	DB25 MALE	13	N/C
J5	DB25 MALE	14	N/C
J5	DB25 MALE	15	N/C
J5	DB25 MALE	16	N/C
J5	DB25 MALE	17	LATCH/STROBE
J5	DB25 MALE	18	GROUND
J5	DB25 MALE	19	+SUPPLY VOLTAGE
J5	DB25 MALE	20	-SUPPLY VOLTAGE
J5	DB25 MALE	21	HEATER VOLTAGE
J5	DB25 MALE	22	HEATER RETURN
J5	DB25 MALE	23	N/C
J5	DB25 MALE	24	N/C
J5	DB25 MALE	25	N/C

UNLESS OTHERWISE SPECIFIED DIMENSIONS ARE IN INCHES
TOLERANCE ARE
FRACTIONS DECIMALS ANGLES
± xx ±.020
± xxx ±.010

WEIGHT
17 oz. (482gr.)

FINISH

DO NOT SCALE DRAWING

CONTRACT NO.

APPROVALS	DATE
DRAWN N.NGUYEN	6/01/09
CHECKED	
ISSUED	

MICRO LAMBDA WIRELESS, INC.

DUAL FILTER WITH MIL. DIC. DRIVER

SIZE	CAGE No	DWG. NO.	REV.
	0RN63	21 - 086	A

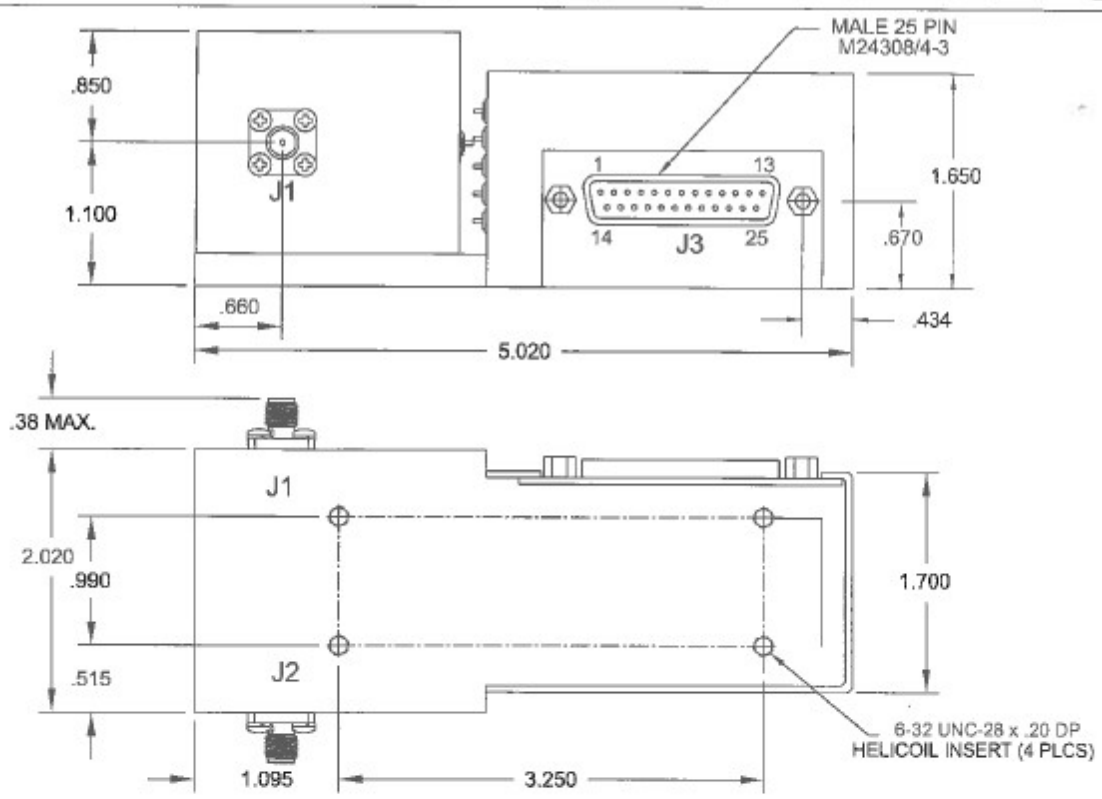

NOTES :

1. - DIMENSIONS ARE IN INCHES
2. - SUPPLY & GROUND WIRES = 20-22 GAUGE
   ALL OTHER WIRES = 24-26 GAUGE
3. - THERMAL COMPOUND REQUIRED BETWEEN
   BASE PLATE AND MOUNTING SURFACE

4. - **DIMENSIONS IN ( )** ARE IN MM
4. - LATCH/STROBE TTL 0 = DATA ACTIVE
   TTL 1 = DATA LATCHED

(*): TTL BAND SEL. 0=8-Fmax ; 1=2-8 GHz
* 000=2GHz ; 5FF=8GHz ; FFF=Fmax

CONNECTIONS			
CONN.	TYPE	PIN #	FUNCTION
J1	V-CONN (FEM)	THD	RF IN
J2	V-CONN (FEM)	THD	RF OUT
J3	DB25 MALE	1	DATA BIT 0 (LSB)
J3	DB25 MALE	2	DATA BIT 1
J3	DB25 MALE	3	DATA BIT 2
J3	DB25 MALE	4	DATA BIT 3
J3	DB25 MALE	5	DATA BIT 4
J3	DB25 MALE	6	DATA BIT 5
J3	DB25 MALE	7	DATA BIT 6
J3	DB25 MALE	8	DATA BIT 7
J3	DB25 MALE	9	DATA BIT 8
J3	DB25 MALE	10	DATA BIT 9
J3	DB25 MALE	11	DATA BIT 10
J3	DB25 MALE	12	DATA BIT 11 (MSB)

CONNECTIONS			
CONN.	TYPE	PIN #	FUNCTION
J3	DB25 MALE	13	N/C
J3	DB25 MALE	14	N/C
J3	DB25 MALE	15	N/C
J3	DB25 MALE	16	N/C
J3	DB25 MALE	17	LATCH/STROBE
J3	DB25 MALE	18	GROUND
J3	DB25 MALE	19	+SUPPLY VOLTAGE
J3	DB25 MALE	20	-SUPPLY VOLTAGE
J3	DB25 MALE	21	HEATER VOLTAGE
J3	DB25 MALE	22	HEATER RETURN
J3	DB25 MALE	23	FM COIL + **
J3	DB25 MALE	24	FM COIL - **
J3	DB25 MALE	25	TTL BAND SELECT *

* REQUIRED FOR DUAL OSC. ONLY
** NOT USED FOR FILTER

UNLESS OTHERWISE SPECIFIED DIMENSIONS ARE IN INCHES
TOLERANCE ARE:
FRACTIONS ± | DECIMALS .XX ± .010, .XXX ± .005 | ANGLES ±
WEIGHT: 20 oz.
FINISH
DO NOT SCALE DRAWING

CONTRACT NO.

APPROVALS		DATE
DRAWN	N.NGUYEN	10/5/15
ENGR	DS	10/5/15
MANUF.		
Q.A.		

MICRO LAMBDA WIRELESS, INC.

BPF (2.0"X1.7") WITH 12 BIT DIGITAL DRIVER & V CONN.

SIZE	CAGE No.	DWG. NO.	REV
-	0RN63	99 - 0021 - 139	